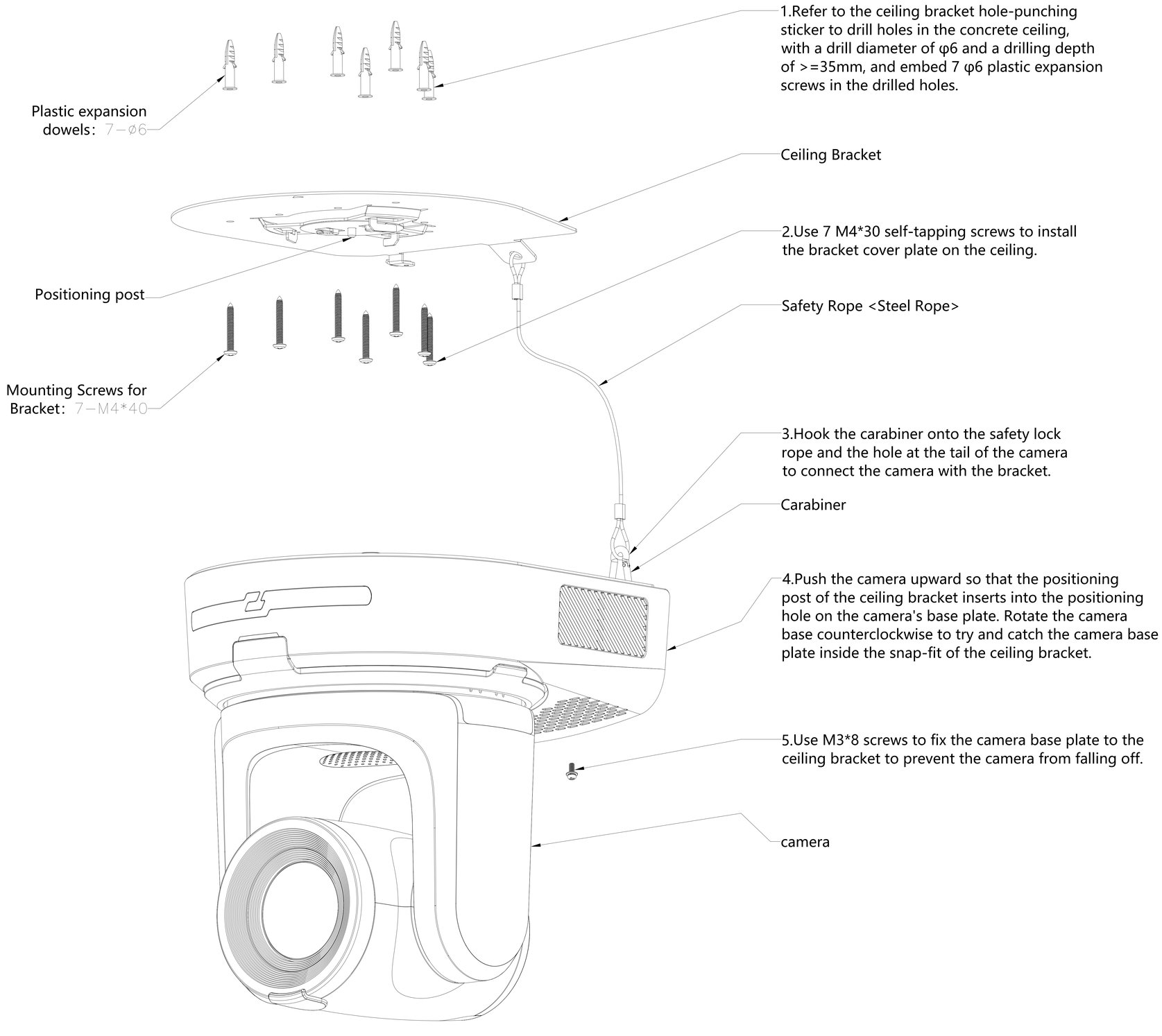
1.Refer to the ceiling bracket hole-punching sticker to drill holes in the concrete ceiling, with a drill diameter of φ6 and a drilling depth of >=35mm, and embed 7 φ6 plastic expansion screws in the drilled holes.
Plastic expansion dowels: 7-Ø6
Ceiling Bracket
2.Use 7 M4*30 self-tapping screws to install the bracket cover plate on the ceiling.
Positioning post
Safety Rope <Steel Rope>
Mounting Screws for Bracket: 7-M4*40
3.Hook the carabiner onto the safety lock rope and the hole at the tail of the camera to connect the camera with the bracket.
Carabiner
4.Push the camera upward so that the positioning post of the ceiling bracket inserts into the positioning hole on the camera's base plate. Rotate the camera base counterclockwise to try and catch the camera base plate inside the snap-fit of the ceiling bracket.
5.Use M3*8 screws to fix the camera base plate to the ceiling bracket to prevent the camera from falling off.
camera